The Organic Rankine Cycle –
Power Production from Low Temperature Heat

Hartmut Spliethoff, Andreas Schuster
Institute for Energy Systems
Technische Universität München

Electricity generation, combined heat and power
Strasbourg, 14 -16 September 2006

Contents

- Introduction
  - History…
  - Recapitulation Clausius Rankine Cycle
- State of the Art Applications
  - Biomass Combustion
  - Geothermal Power Plants
- Innovative Applications
  - Solar Desalination with Organic Rankine Cycle
  - Waste-heat recovery from biomass digestion plants
- Conclusion and Outlook

Who was the Rankine - cycle's "father" ?

William John Macquorn Rankine

* 5th July 1820
† 24th December 1872

- Scottish physicist and engineer
- one of the founders of thermodynamics
- important contributions to the theory of steam engine

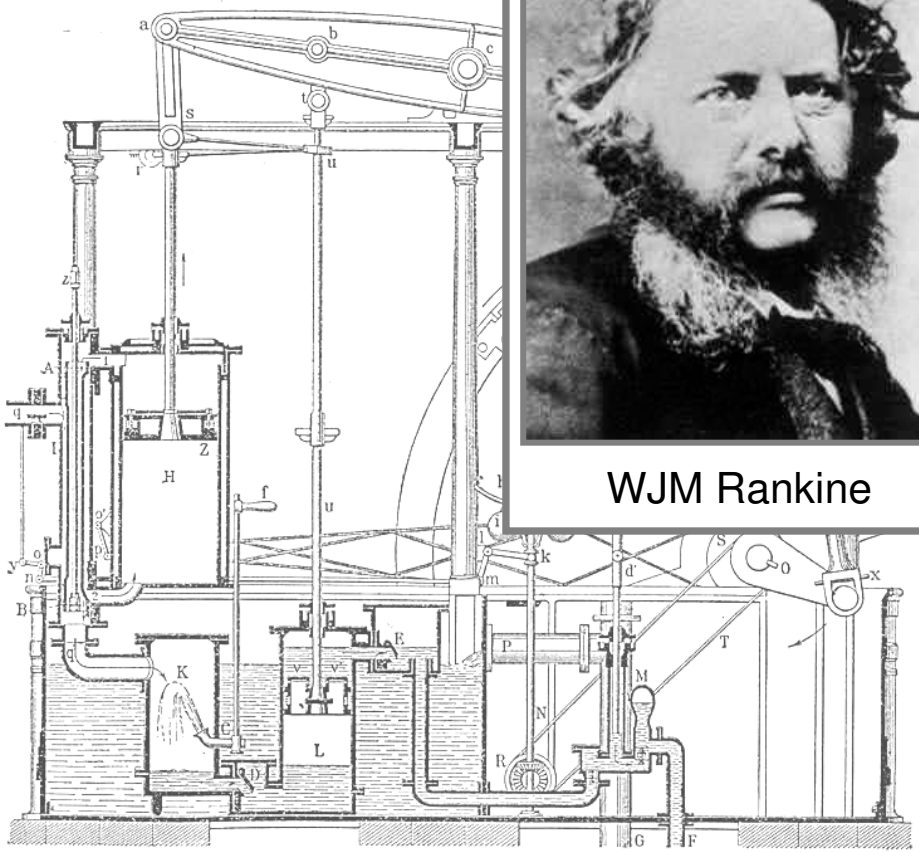

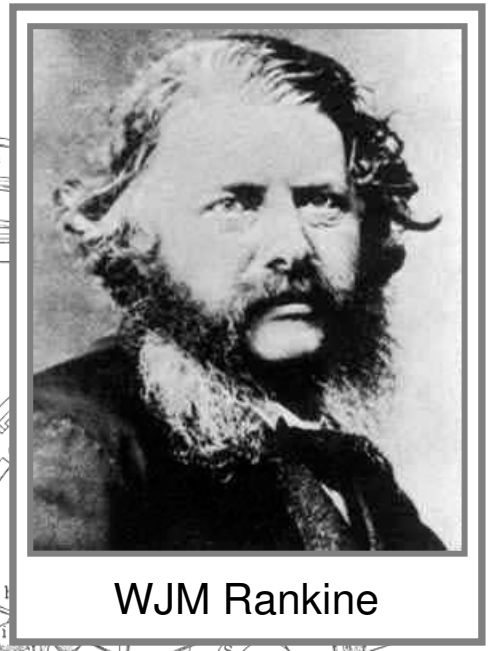

WJM Rankine

Assembly of a steam power station

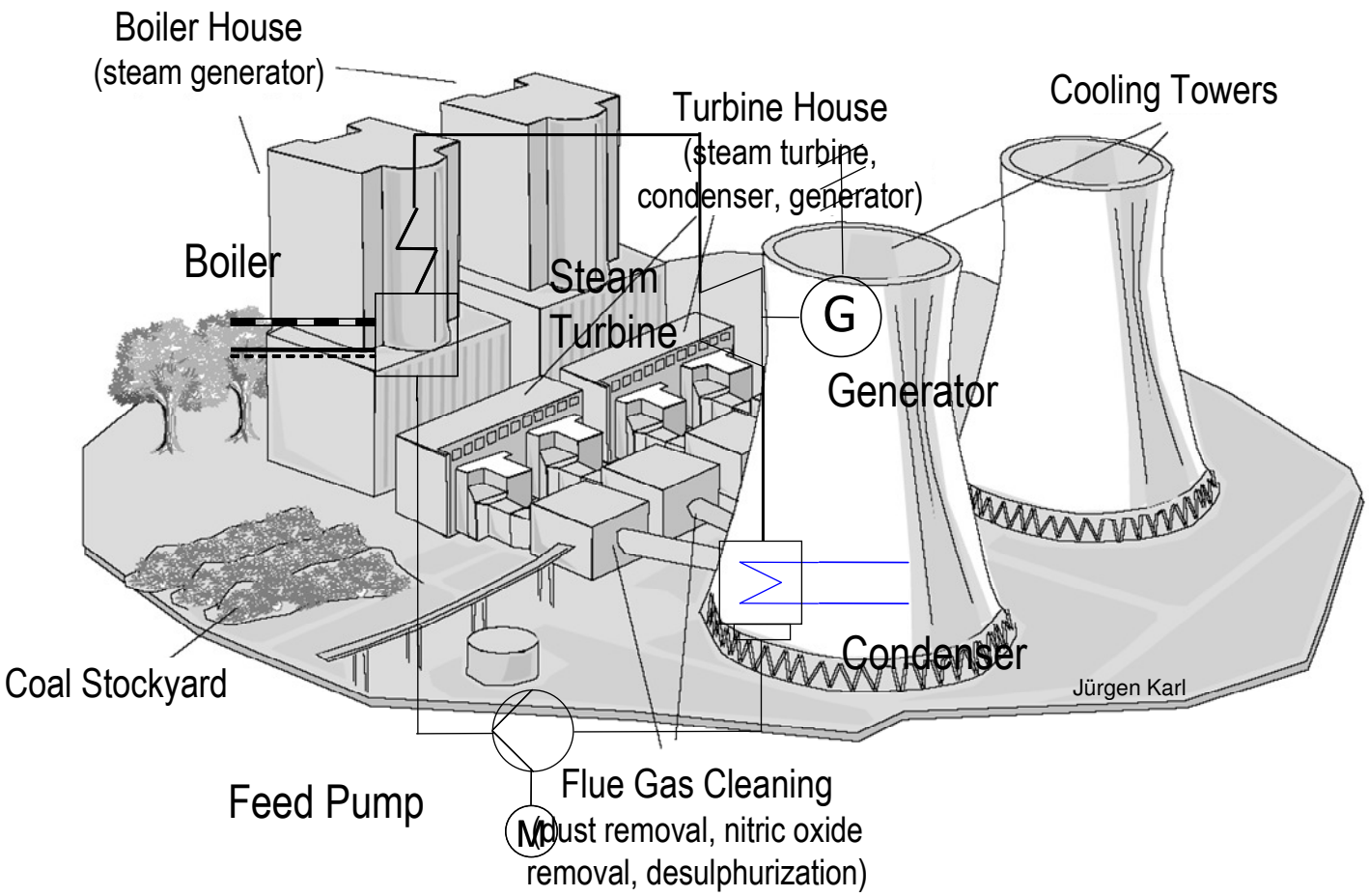

Power range and efficiency of common power machines for external combustion

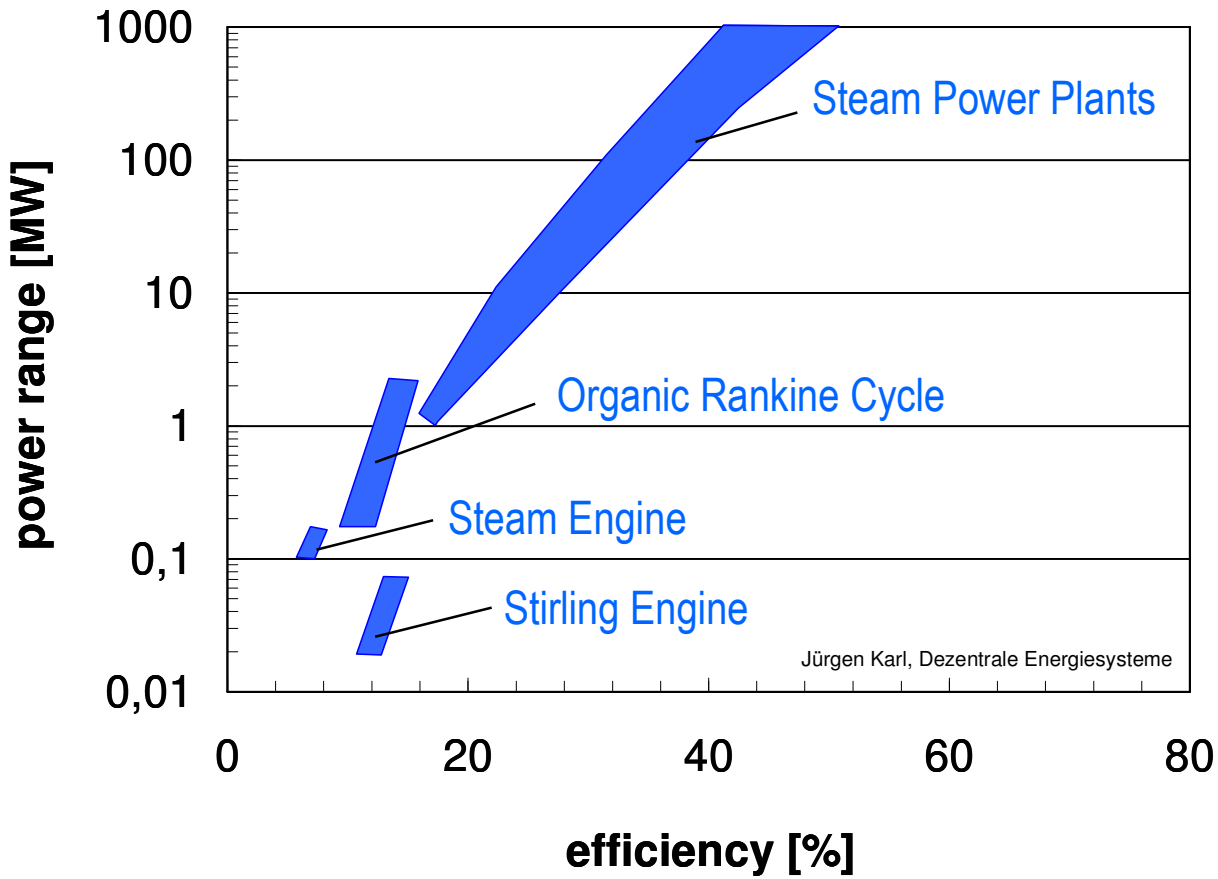

The Organic Rankine Cycle – an application for small power range

The ORC uses organic substances instead of water as working fluid

- Silicone Oils
- Hydrocarbons
- Fluorocarbons

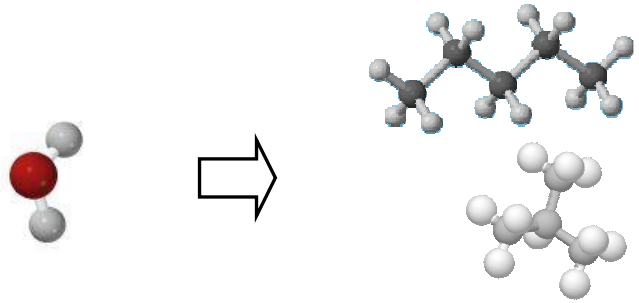

water organic fluids

Organic fluids lead to

- higher turbine efficiencies due to the higher mass flow (leakage ↓)
- low maintenance operation
- good part load behavior

The Organic Rankine Cycle – an application for small power range and external heat source

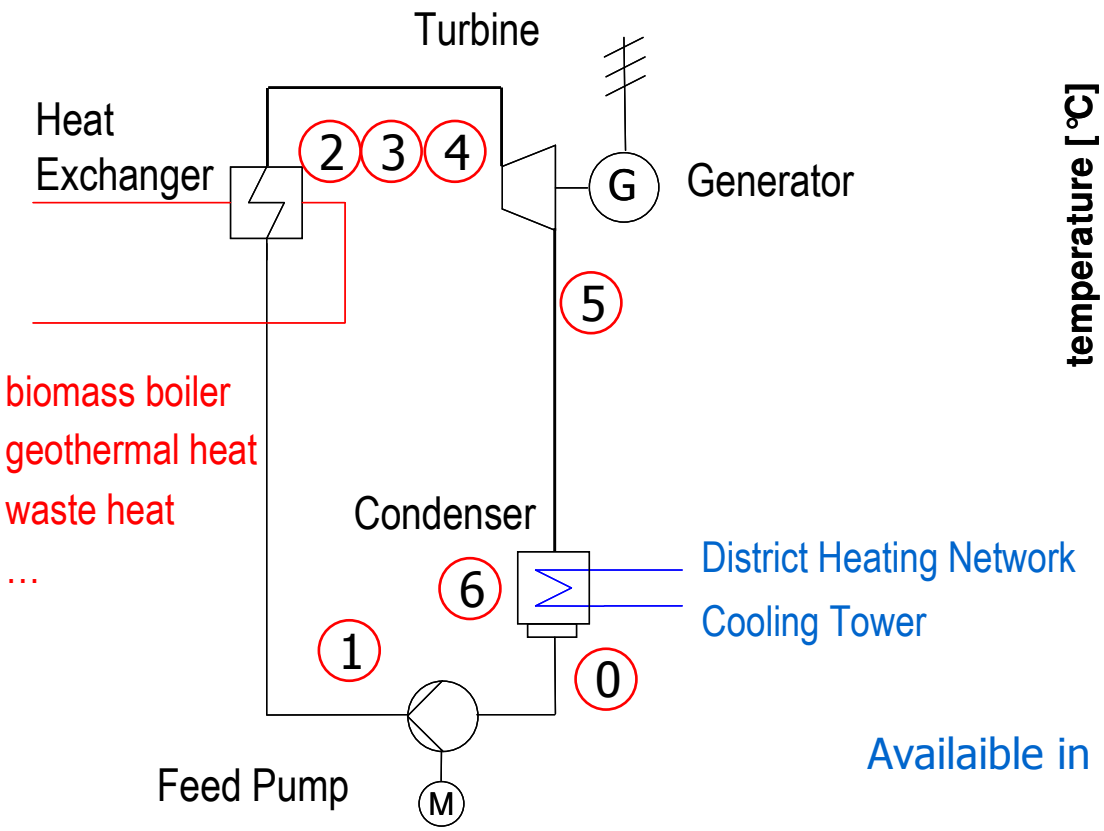

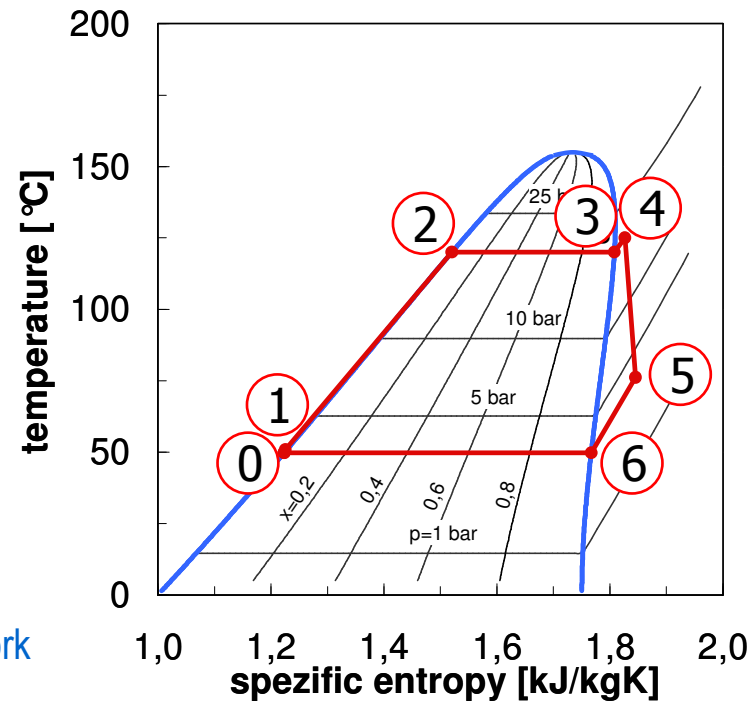

Availaible in a power range up to 1500 kW...

ORC with recuperator

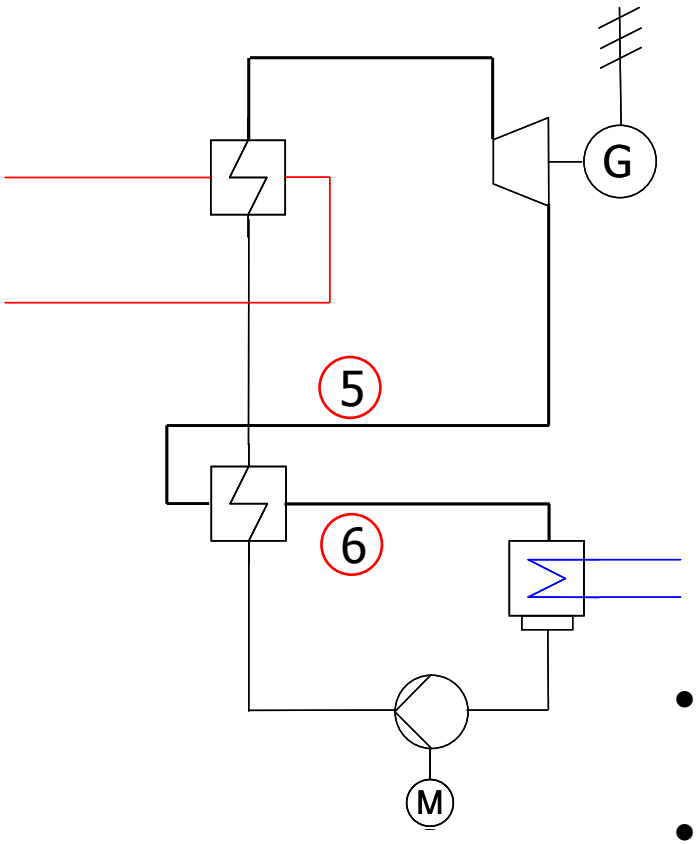

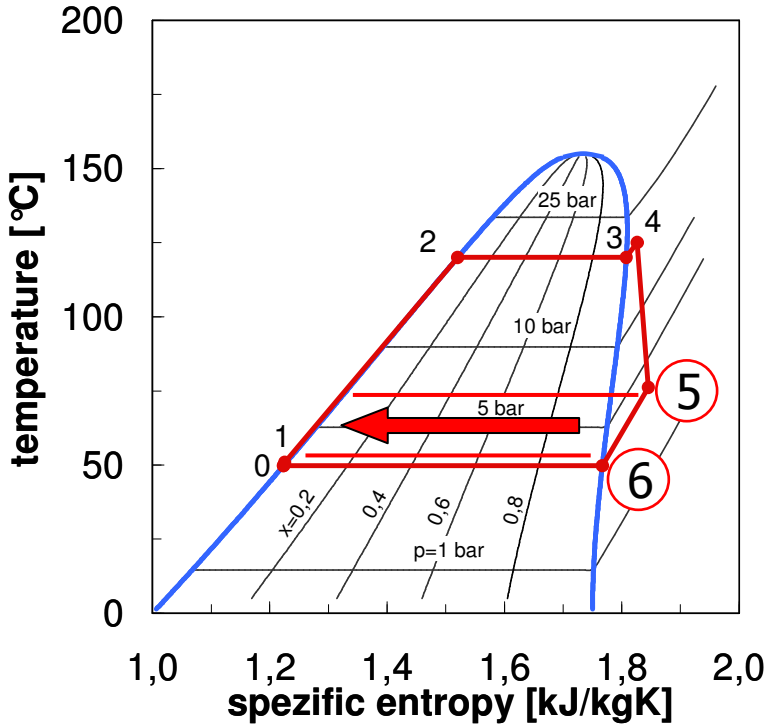

- Expansion does end in the area of superheated steam (5)
- Sensible Heat of steam ((5) - (6)) can be used for preheating the liquid working fluid

State of the Art Applications

ORC Unit from Turboden, Brescia Italy

- Units from 500 kW up to 1500 kW available
- Standardized Product

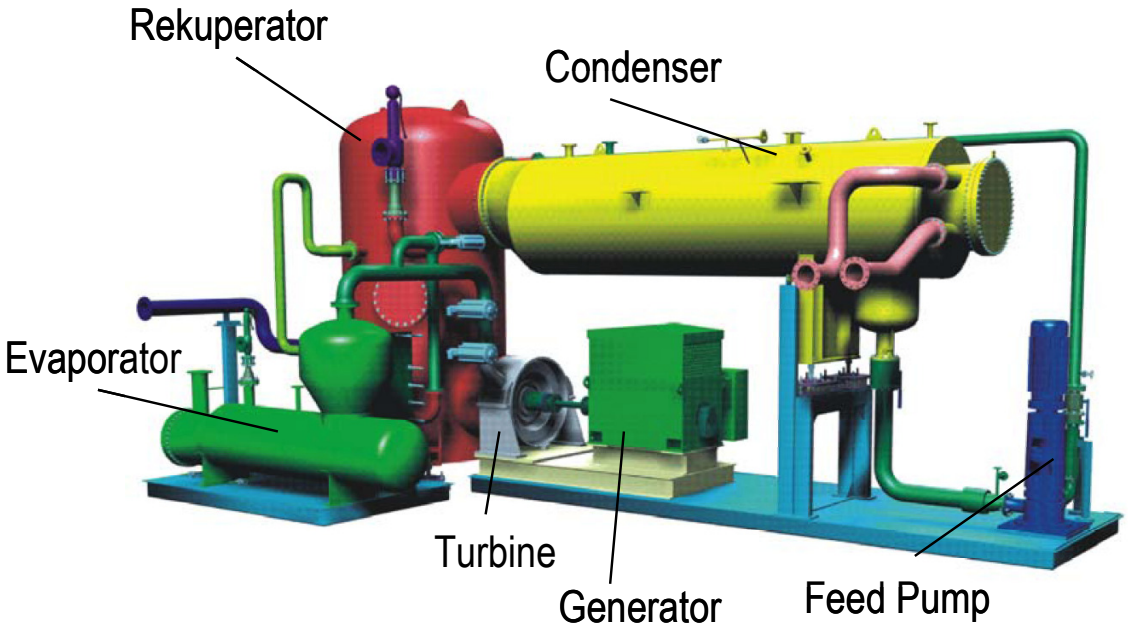

- Units are delivered completely assembled to installation site

Biomass Combustion

Thermo oil loop

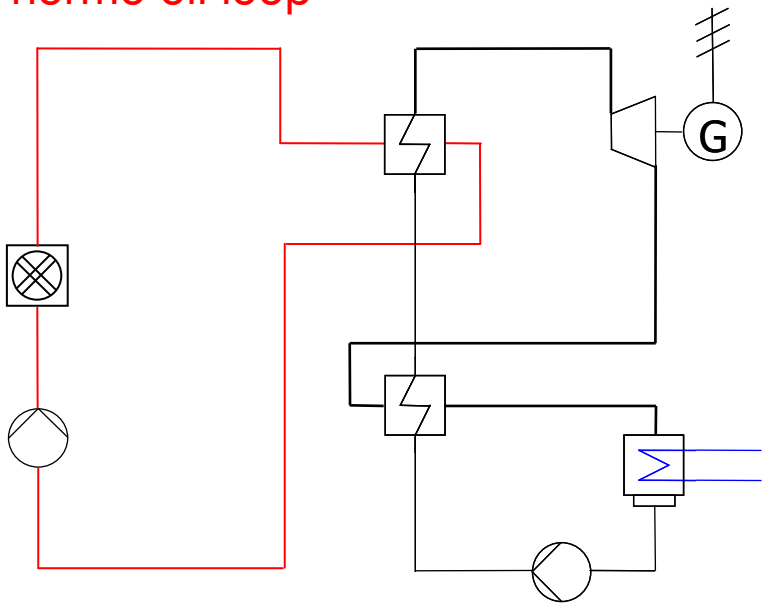

Organic
Rankine Cycle

Insertion

- dependency of electric efficiency of exhaust gas losses of biomass boiler
- flow temperature / return temperature thermo oil 270 °C / 220 °C

Electric Efficiency

10…12 %

Manufacturer information of 16…18 % don't include the furnace

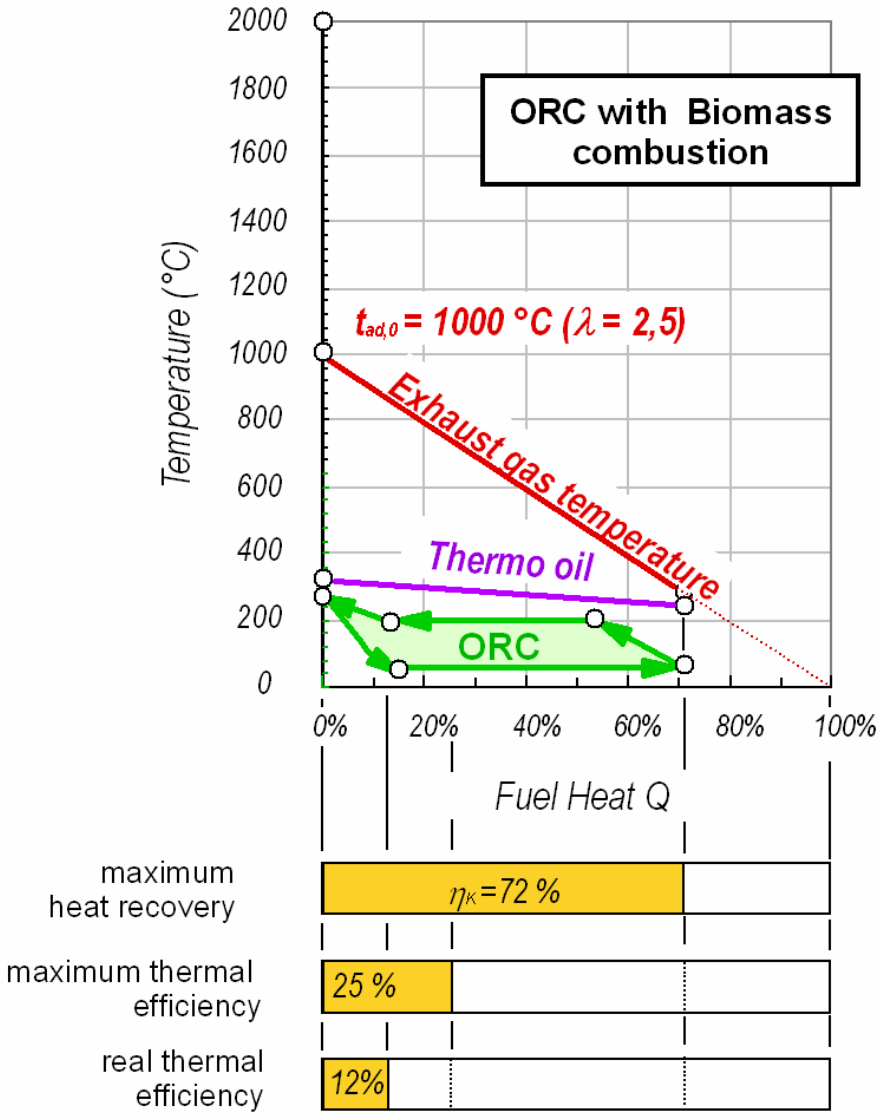

Geothermal Power Plants

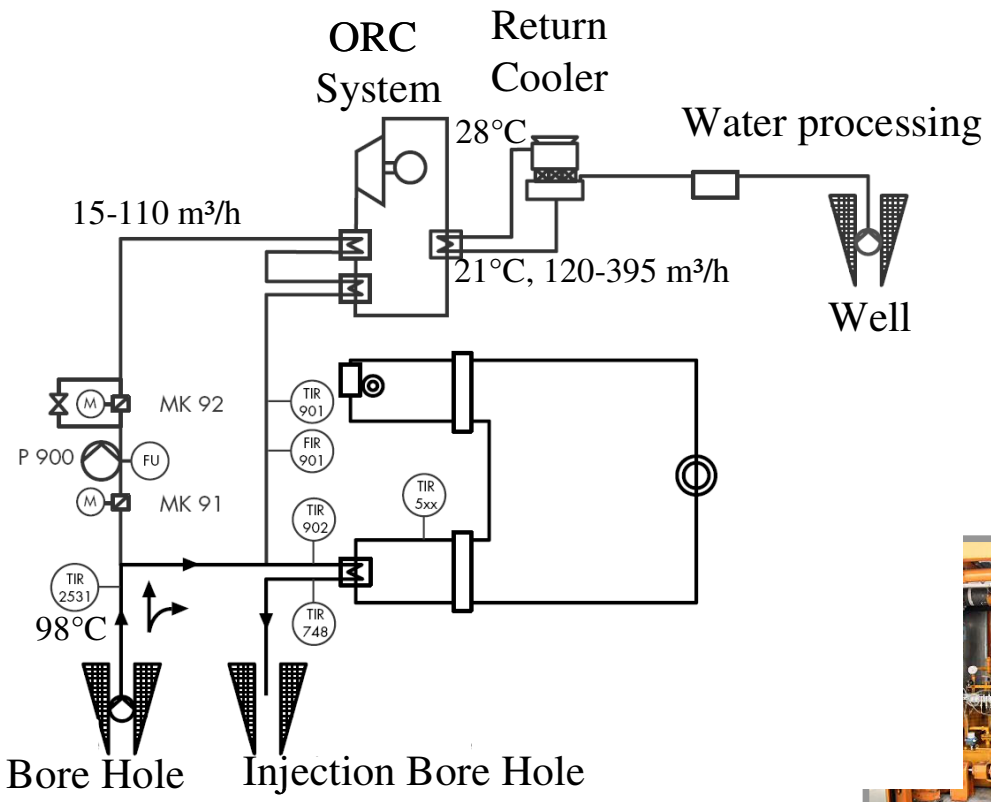

Innovative applications

Innovative stand-alone solar desalination system with an Organic Rankine Cycle

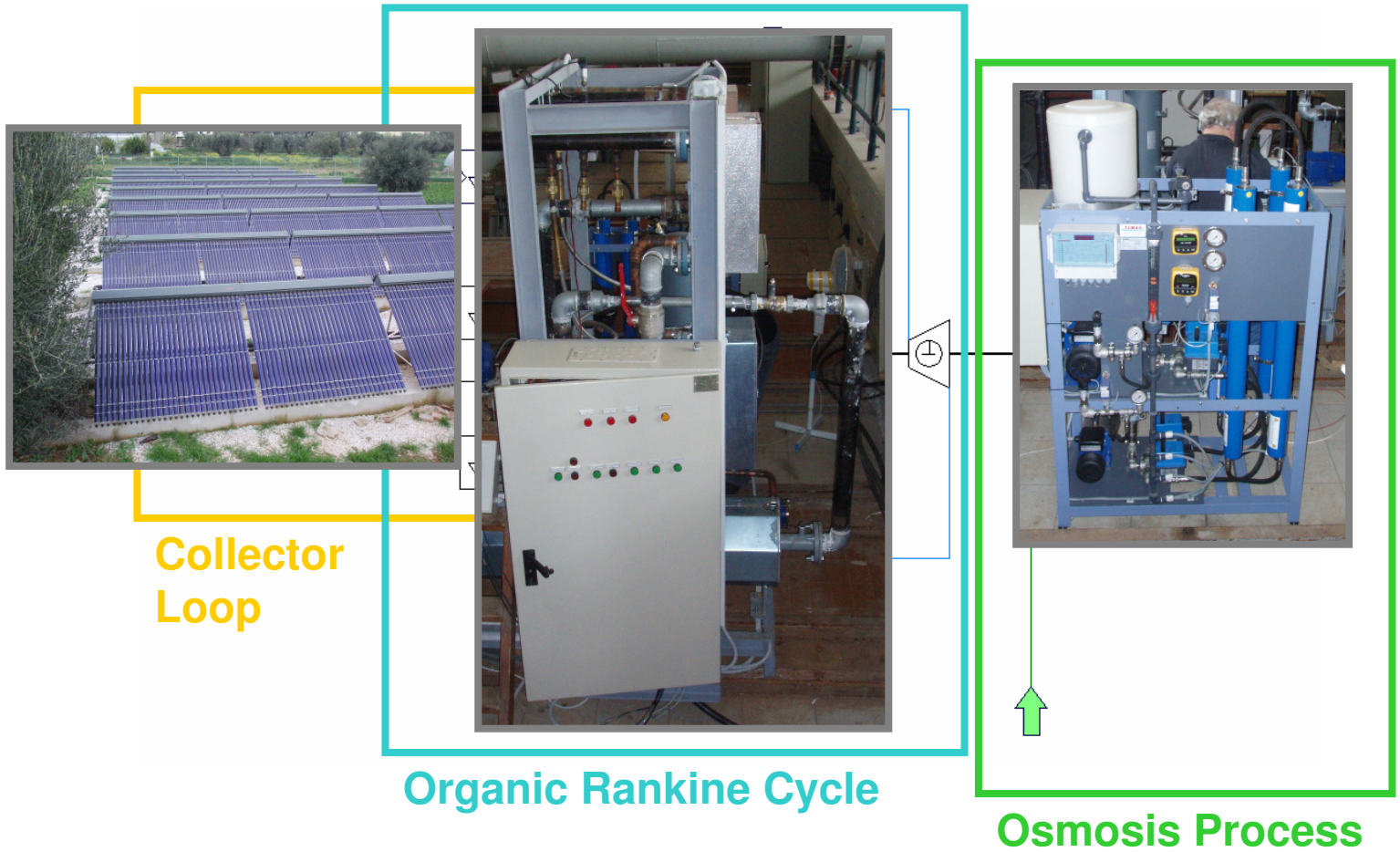

Design Criteria for ORC with solar heat

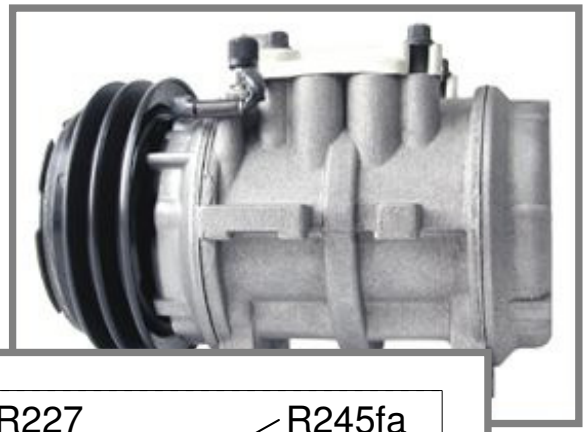

- Scroll expander for mechanical power in the range of 10 kW
- Scroll expander is a positve displacement expansion machine
  - Different working fluids offer nearly the same efficieny
  - Fluid with efficiency maximum at the lowest posssible temperature fits best

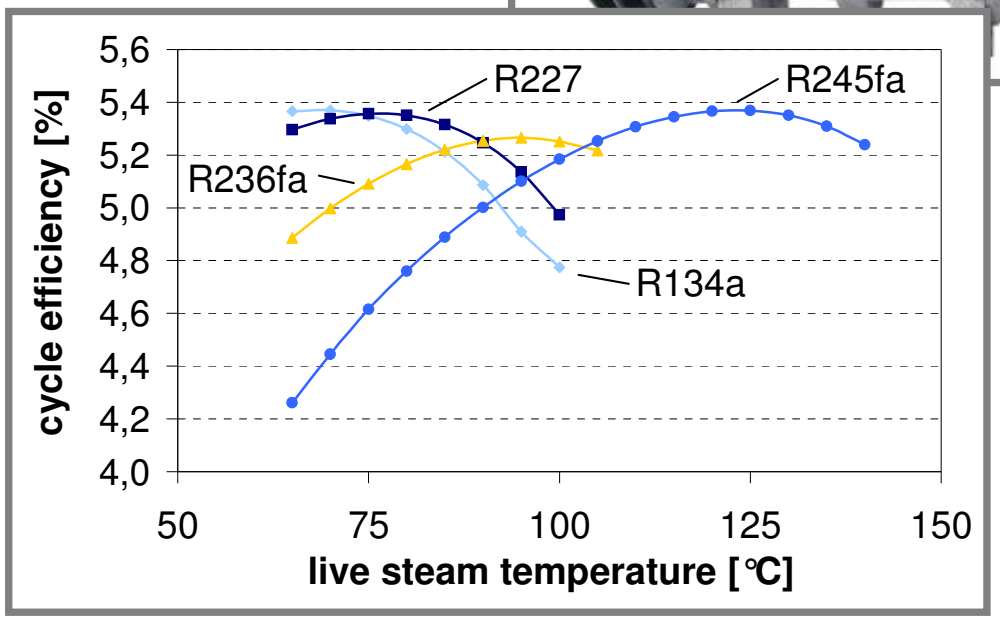

Status of the project

- The project is succesfully finished
- The expander efficiency is between 60 and 70 % over a wide operation range
- The cycle efficiency is around 4 %
- The fresh water production is approximately 320 l/h with a thermal input of 35 kW

The research was done in the framework of the project RO-Solar-Rankine (COOP-CT-2003-507997) funded by the European Comission. Therefore the TU München is much obliged.

Waste-heat recovery from biomass digestion plants

- Gainful use of the excess heat of the IC engine is important for the economic and energetic efficiency
- Only 20…25 % of the waste heat of the engine is needed for heating the digester
- The characteristics of heat demand and the location of the digestion plants is hindering for the use of waste heat in district heating networks

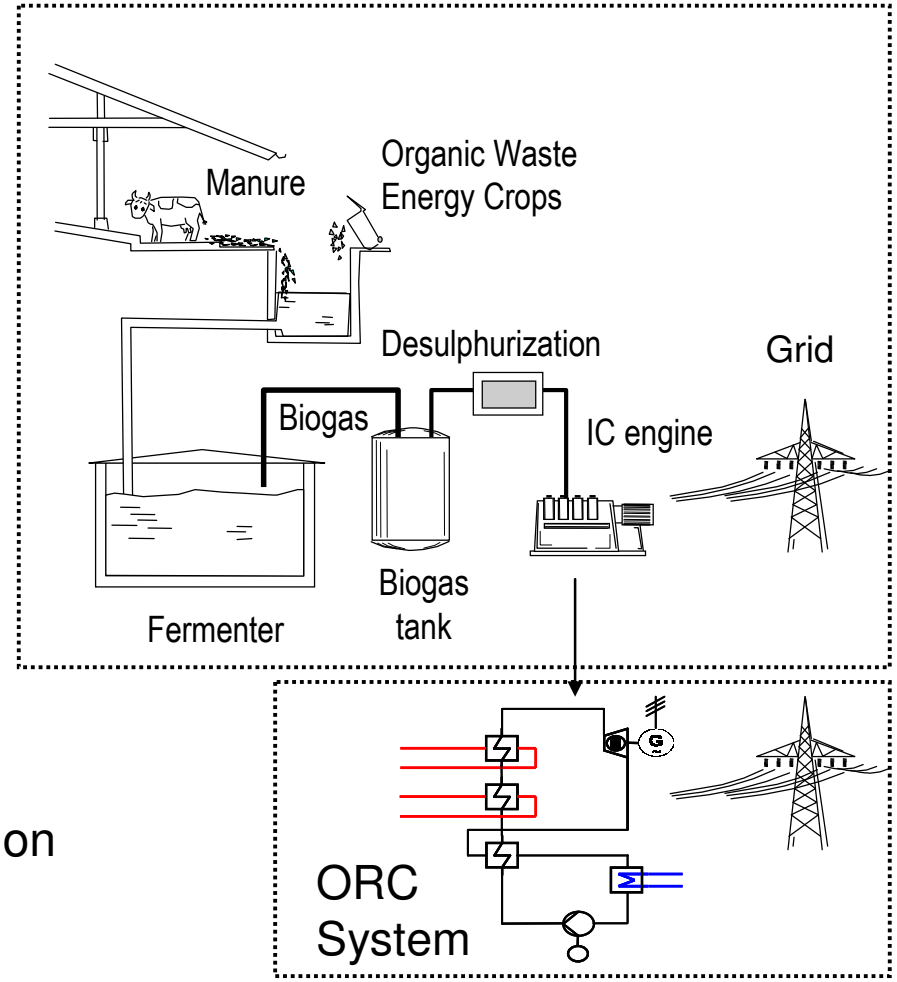

enhanced electricity production by the application of ORC

Case Study for biomass digestion plant

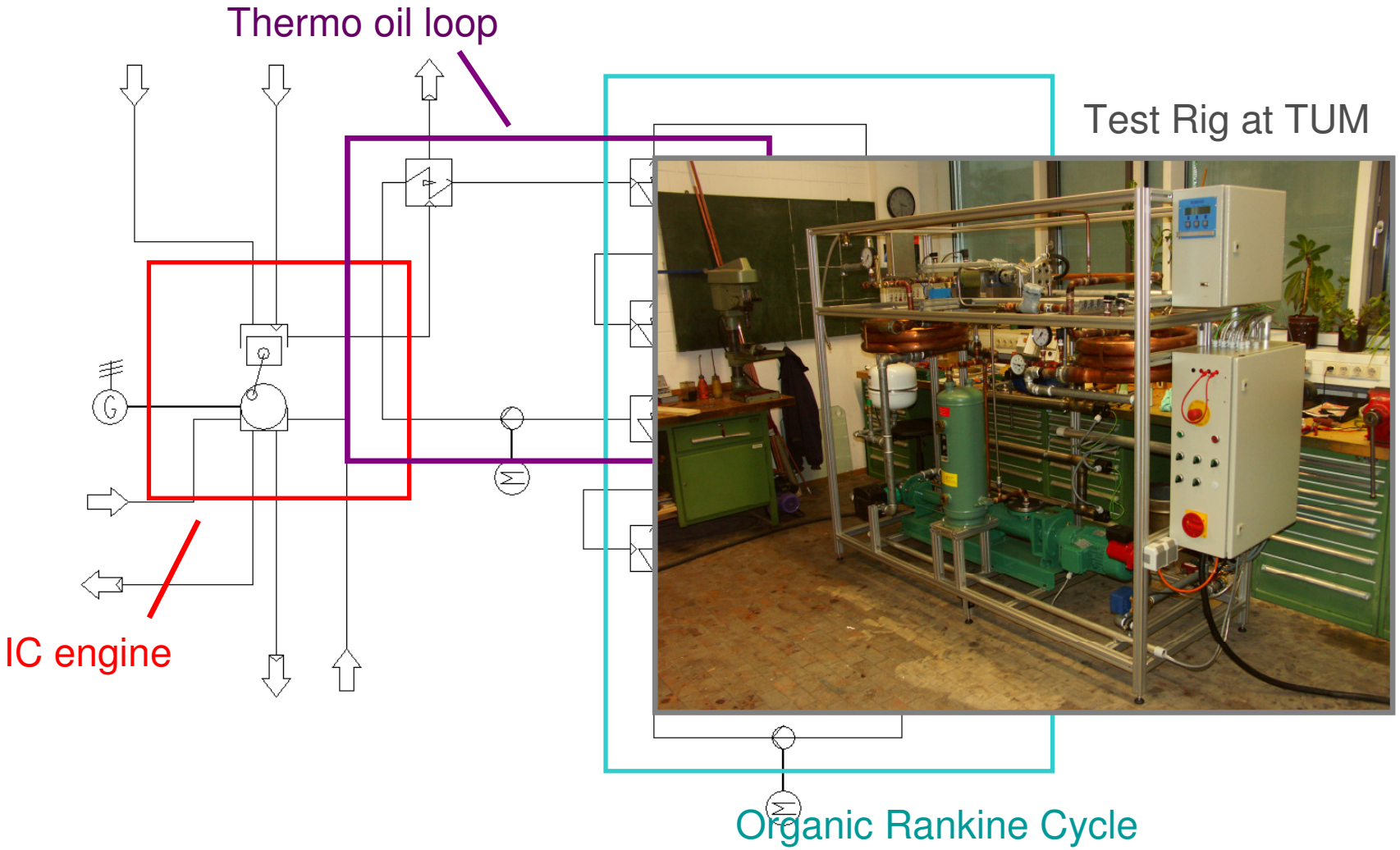

Case Study for biomass digestion plant

- Combustion Engine 555 kW Deutz TCG 2016 V12
- Electrical Power 537 kW_{el}
- Exhaust gas temperature of ~ 490 °C
- Additional Power production of 35 kW_{el} equivalent to an efficiency gain of 2.6 %
- With an interest rate of 5 % and 7.500 full load hours electricity production cost of 5.65 €-Ct/kWh can be reached

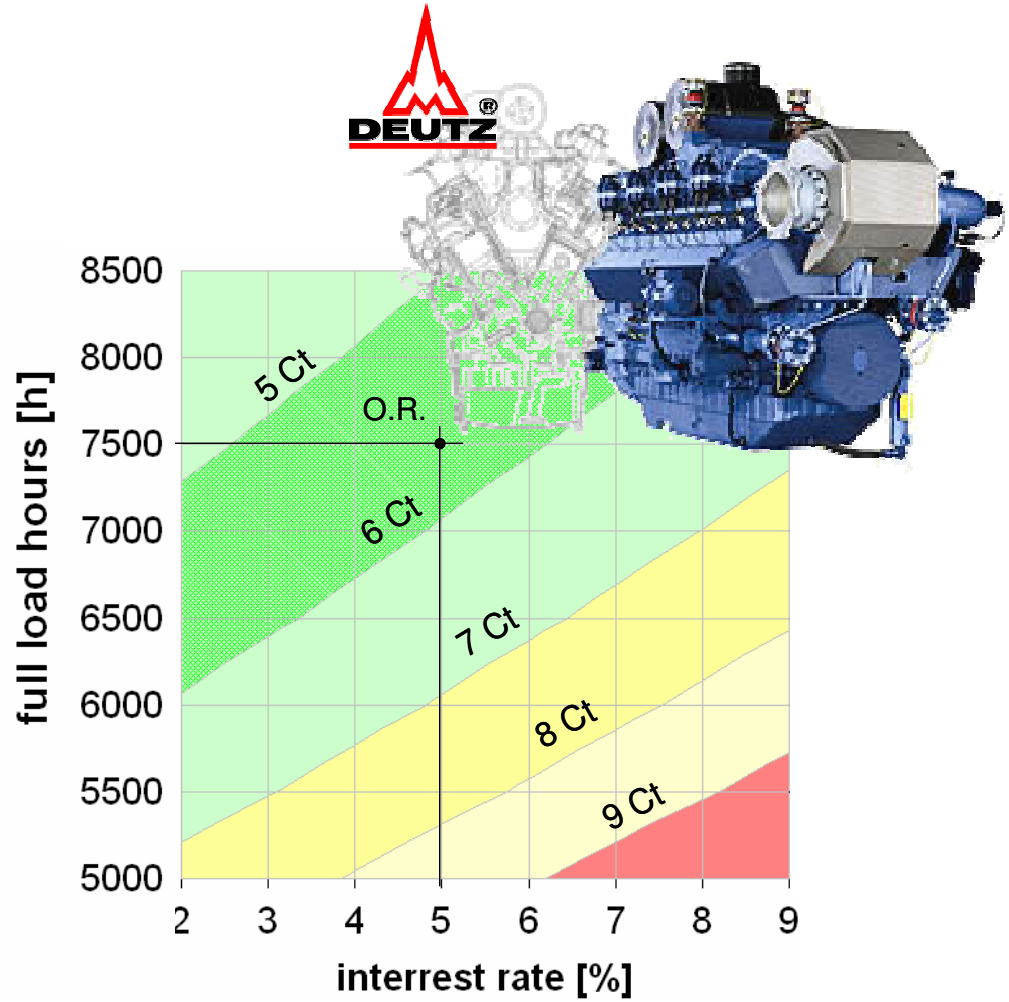

Conclusions:

- Organic Rankine Cycles are a modification of the well known Clausius Rankine Cycle
- The use of organic fluids offer various advantages
- The ORC technology for electricity production from biomass and geothermal heat is state of the art
- ORCs are also suitable for waste-heat recovery and power production from solarthermal heat – these applications are subject of further research
- ORC linked with Reverse Osmosis is a promising possibility for seawater desalination