Geothermal power generation by GEOCAL®

by R. Niesner

Strasbourg, 14.09.2006

Short introduction of GMK

- engineering and distribution of heat and power units up to 10 MWth and 2 MWel (per modul) with a focus on renewables
- two product lines
  - **ORC-technology (ECOCAL®, GEOCAL®, INDUCAL®)**
    power units to convert heat of biomass combustion, of exhaust gases or geothermal heat into electric power
  - **LIPOCAL®**
    Esterification and purification of fat and oil as fuel for diesel engines or as raw material for biodiesel production

Short introduction of GMK

- Basic and detail engineering of small heat and power plants (biomass, geothermal sources, industrial waste heat)
- Operating an own ECOCAL®-plant with 10.000 t/a wood chips
- Research and development with a focus on cycle thermodynamics, effective heat transfer, utilization of renewable resources

ORC-products

- ECOCAL®
  - ORC-power stations used heat of thermal oil circuit at a temperature level of 320 °C. Primary heat is delivered by biomass firing.
- GEOCAL®
  - ORC-power stations used geothermal heat at a temperature level higher than 95 °C.
- INDUCAL®
  - ORC-power stations used industrial waste heat or heat of exhaust gases.

Geothermal power generation

Advantages

- renewable heat source
- power generation of base load
- completely free of CO_2 emission

Requirements

- high operational availability (> 8.000 hr/a)
- standardized power plant design
- easy maintenance
- low internal consumption

Possibilities with ORC

- Requirements depend mainly on thermal water source
  - efficiency – temperature
  - power– flow rate
  - maintenance – quality of thermal water
- Options with various working fluids
  - optimized utilisation of heat source
  - reduced problems of corrosion (only thermal water side)

Working fluids

- hydrocarbons
  - saturated (n-pentane)
  - unsaturated (toluene)
- fluorated hydrocarbons
  - perfluorated (perfluoropentane)
  - partially fluorated (Heptafluorpropane R227ea)
- silicon oils
  - Siloxane (Octamethyltrisiloxane)
- ammonia, ammonia-water mixture (Kalina-Cycle)

ORC – Organic-Rankine-Cycle

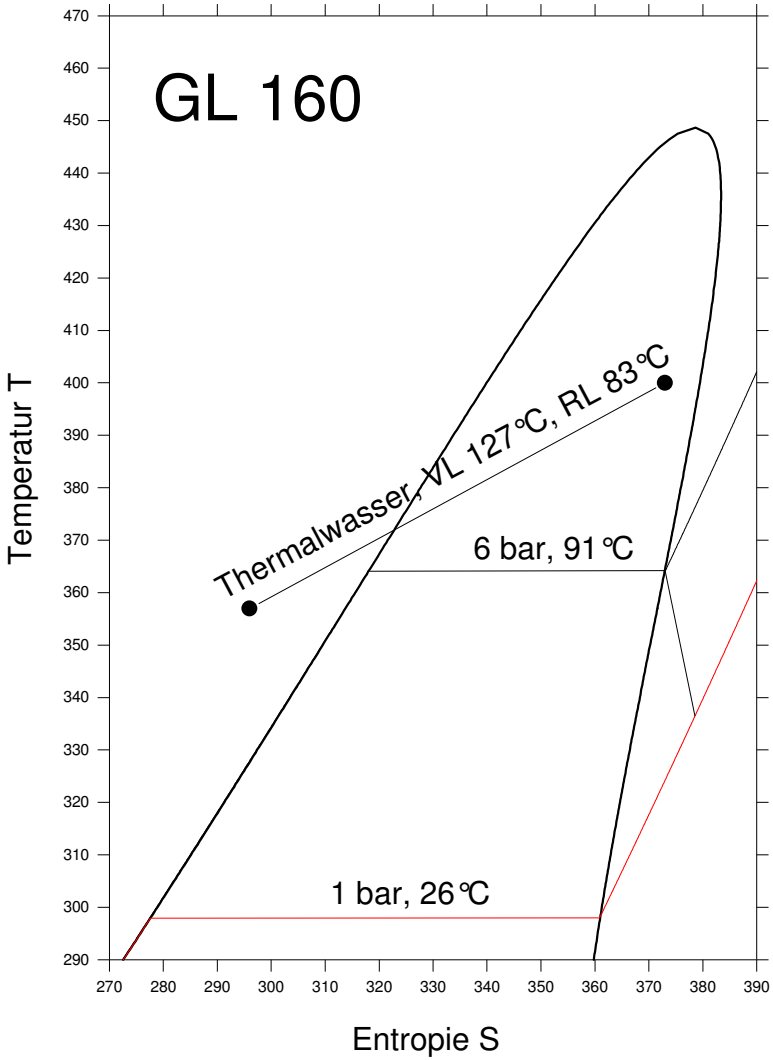

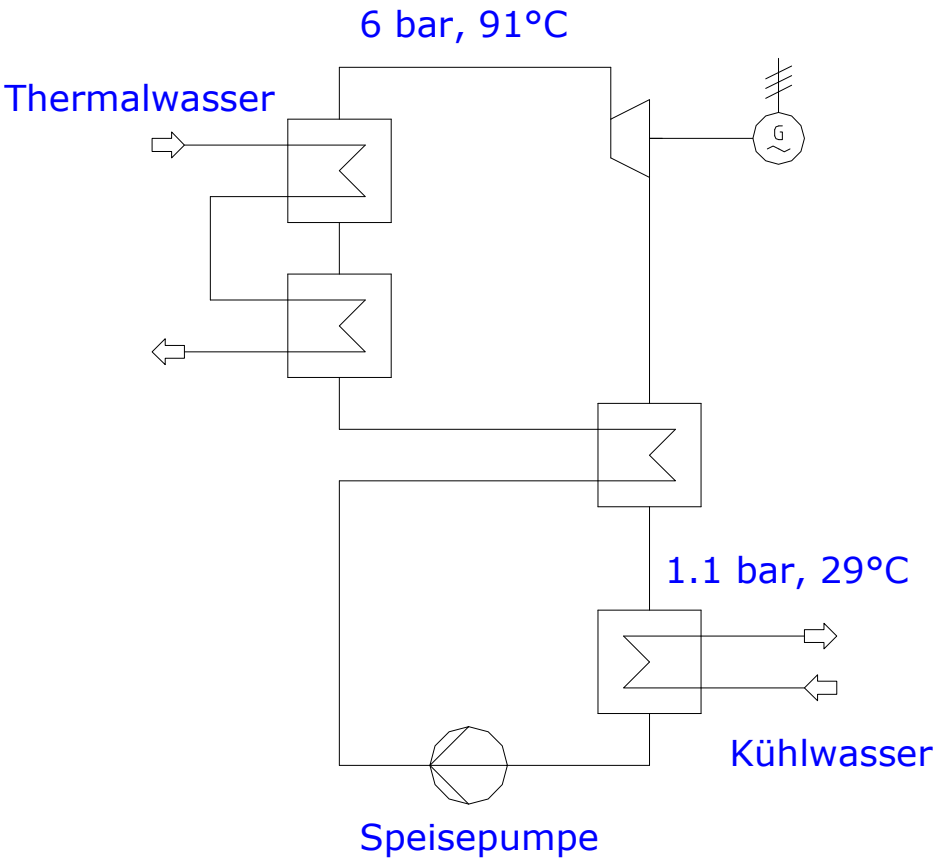

Comparison of some working fluids

Working fluid	power	internal consumption	efficiency	
			brutto	netto
	kW	kW	%	%
GL 160	1.024	41	12,0	11,6
n-pentane	934	34	11,0	10,6
i-pentane	866	35	10,2	9,8
perfluoropentane	779	46	9,2	8,6

- Thermal water source
  - thermal power 8.500 kW
  - flow temperature 127 °C
  - return temperature 83 °C

ORC-Turbines

- development in cooperation with AG KK&K – **AFA10**
- standardized principle of turbine design
  - Casing, wheel, shaft, nozzle ring, sealing
  - each seperately exchangeable
- without a gear at 3.000 rpm
- bearing outside of casing
- power up to 2.500 MW per wheel

Example

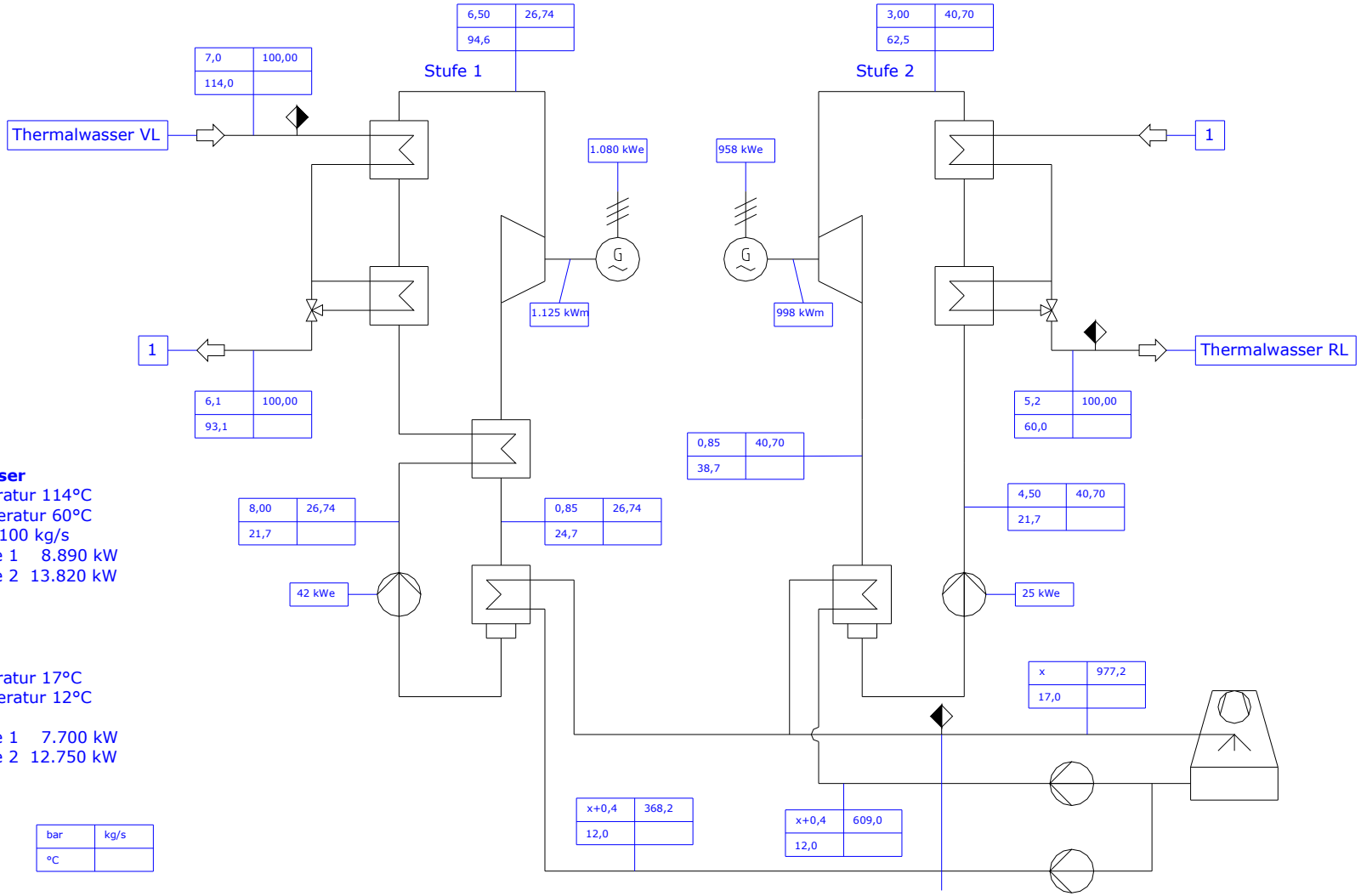

Thermalwasser
Vorlauftemperatur 114°C
Rücklauftemperatur 60°C
Massenstrom 100 kg/s
Leistung Stufe 1 8.890 kW
Leistung Stufe 2 13.820 kW

Kühlwasser
Vorlauftemperatur 17°C
Rücklauftemperatur 12°C

Leistung Stufe 1 7.700 kW
Leistung Stufe 2 12.750 kW

GMK

bar	kg/s
°C	

Advantages of GEOCAL®

- modular concept of power unit
- standardized concept but optimized to heat source
- low maintenance cost
- service world wide within 24 hours possible
- harmless working fluid (health and nature)

Contact

GMK Gesellschaft für Motoren
und Kraftanlagen mbH

Reuterstraße 5

D-18211 Bargeshagen

tel.: ++ 49 38203 7758 0

fax: ++ 49 38203 7758 20

e-mail info@gmk.info

internet www.gmk.info

AG Kühnle, Kopp & Kausch

Heßheimer Straße 2

D-67227 Frankenthal

tel.: ++ 49 6233 85 2459

fax: ++ 49 6233 85 2660

internet www.agkkk.de